33

U.S. COAST GUARD CUTTERS

C.G. 65-71

No. 65 GEORGE W. CAMPBELL
No. 66 SAMUEL D. INGHAM
No. 67 WILLIAM J. DUANE
No. 68 ROGER B. TANEY
No. 71 GEORGE M. BIBB
No. 69 ALEXANDER HAMILTON
No. 70 JOHN C. SPENCER

RESTRICTED

BOOKLET
OF
GENERAL PLANS
PREPARED AT NAVY YARD, PHILADELPHIA

NUMBER & ORDER OF SHEETS	
1	COVER & TITLE PAGE
2	OUTBOARD PROFILE
3	INBOARD PROFILE
4	BRIDGES
5	MAIN DECK
6	SECOND DECK
7	PLATFORM DECK
8	HOLD

CORRECTED TO SUIT SHIP		
PLACE	DATE	CONSTRUCTION OFFICER

DRAWN BY T.K. T. TORGAN
TRACED BY T. TORGAN
ASSOC. NAV. ARCH. HILL
NAVAL ARCH. CH. OF DIV. ____________
DATE ________

____________ PRIN. NAVAL ARCHITECT

____________ CONSTRUCTOR U.S.C.G.

____________ CAPTAIN (C.C.) U.S.N. MANAGER

C.G. 6571-0101-20 SHEET No. 1 OF 8

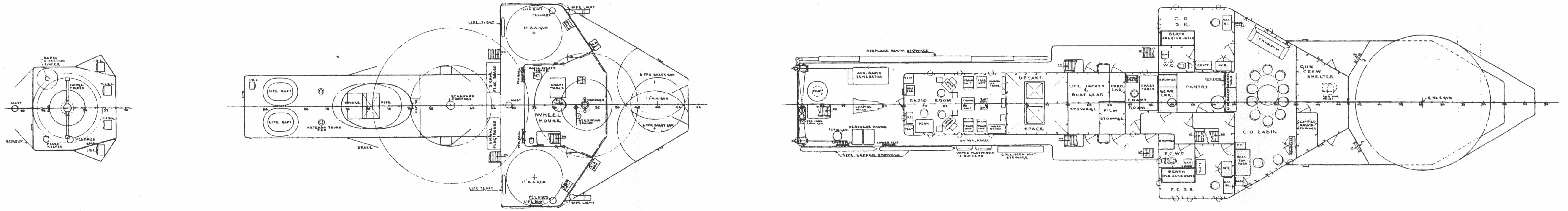
RADIO DIRECTION FINDER
RANGE FINDER
PELORUS
RANGE KEEPER
MAST
SHROUD
I.B.L.
M.I.B.L.
LIFE RAFT
SMOKE PIPE
ANTENNA TRUNK P&S
BRACE
STANDARD COMPASS
SIGNAL FLAG BOARD
LIFE FLOAT
LIFE BUOY
1.1" A.A. GUN
CHART TABLE
COMPASS
STEERING STAND
WHEEL HOUSE
6 PDR. SALUT. GUN
SIDE LIGHT
AIRPLANE BOOM STOWAGE
AUX. RADIO GENERATOR
LOADING MACH.
KEROSENE DRUMS
FOAM GEN.
SIDE LADDER STOWAGE
RADIO ROOM
DESK
24" WALKWAY
UPPER PLATFORMS & BUFFERS
COLLISION MAT STOWAGE
UPTAKE SPACE
LIFE JACKET & BOAT GEAR STOWAGE
PYRO. LKR.
FILM STOWAGE
CHART TABLE
CHART ROOM
SHOWER
GEAR LKR.
PANTRY
C.O. S.R.
BERTH
C.O. W.C.
CHIFF.
W.R.
TRANSOM
C.O. CABIN
GUN CREW SHELTER
CLIPPED AMMN. STOWAGE
F.C. W.C.
ROLL TOP DESK
F.C. S.R.

U.S. COAST GUARD CUTTERS
CG. 65-71
BRIDGES
SCALE = 1/8" = 1 FT.

C.G. 6571-0101-20 SHEET No. 4 OF 8

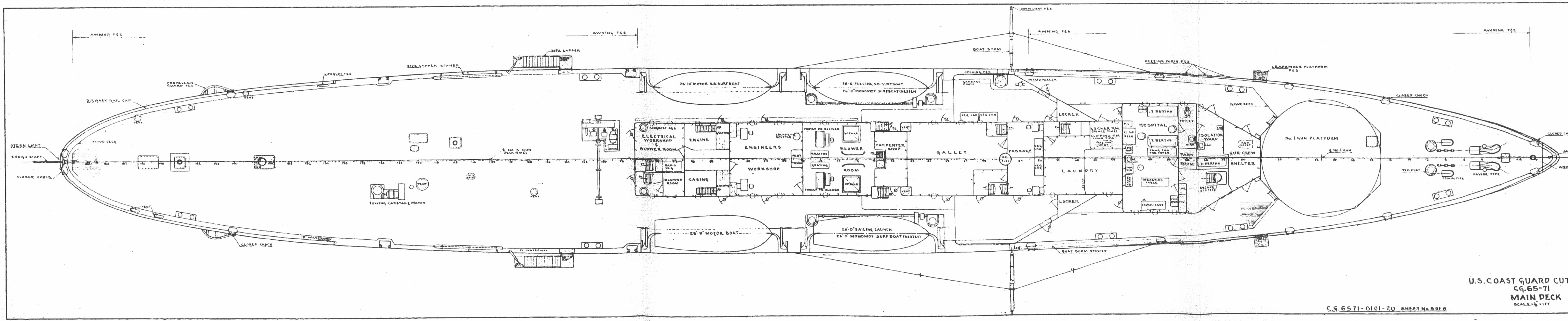
AWNING P&S
SIDE LADDER
SIDE LADDER STOWED
LIFEBUOY P&S
PROPELLER GUARD P&S
BULWARK RAIL CAP
VENT
WOOD DECK
STERN LIGHT
ENSIGN STAFF
CLOSED CHOCK
℄ No. 3 GUN (WAR TIME)
TOWING CAPSTAN & MOTOR
18" WATERWAY
12" WATERWAY
ELECTRICAL WORKSHOP & BLOWER ROOM
RINGPOST P&S
ENGINE
CASING
BLOWER ROOM
RADIO W.C.
ENGINEERS
WORKSHOP
ESCAPE SCUTTLE
FORCED DR. BLOWER
UPTAKE
GRATING
BLOWER ROOM
CARPENTER SHOP
GALLEY
PASSAGE
LAUNDRY
LOCKER
LOCKER RM. (PEACE TIME)
CLIPPING RM. (WAR TIME)
26'-10" MOTOR S.B. SURFBOAT
26'-6 PULLING S.B. SURFBOAT
26'-0" MONOMOY SURFBOAT (NESTED)
26'-9" MOTOR BOAT
26'-0" SAILING LAUNCH
26'-0 MONOMOY SURF BOAT (NESTED)
BOOM LIGHT P&S
BOAT BOOM
BOAT BOOM STOWED
GARBAGE CHUTE
POTATO PEELER
OPENING P&S
VEG. LKR.
FREEING PORTS P&S
HOSPITAL
2 BERTHS
OPERATING TABLE
STERILIZERS
TOILET
ISOLATION WARD
PARK ROOM
GUN CREW SHELTER
ESCAPE SCUTTLE
LEADSMANS PLATFORM P&S
WOOD DECK
No. 1 GUN PLATFORM
℄ No. 1 GUN
CLOSED CHOCK
WILDCAT
CHAIN PIPE
HAWSE PIPE
JACK STAFF
ANCHOR DAVIT

U.S. COAST GUARD CUTTERS
CG. 65-71
MAIN DECK
SCALE = 1/8" = 1 FT.

C.G. 6571-0101-20 SHEET No. 5 OF 8

GENERAL INFORMATION

LENGTH BETWEEN PERPENDICULARS	508'-0"
LENGTH OVER ALL	527'-0"
BREADTH MOLDED EXTREME (FRS 76-73) AT DWL	41'-0"
DRAFT ABOVE BOTTOM OF KEEL (DESIGNED)	12'-6"
RUDDER AXIS	FR 146
CENTER OF PROPELLERS	FR 142
CENTER OF STRUTS	5'-0" FWD FR 14?
DISTANCE BETWEEN FOREMAST AND STUBMAST	11'-9"

HEIGHT ABOVE D.W.L. (12'-6" ABOVE BOTTOM KEEL)

TOP OF FLAG & PENNANT STAFF CAP FOREMAST	114'-7⅞"
TOP OF STUBMAST	51'-0 3/16"
TOP OF TRUCK LIGHT FOREMAST	112'-2½"
ELECTRIC RANGE LIGHT	74'-0"
ELECTRIC MASTHEAD LIGHT	53'-0"
MAIN DECK AT STERN	13'-10¼"
UPPER DECK ABOVE MAIN DECK (MOLDED)	7'-9"
NAVIGATING BRIDGE ABOVE UPPER DECK (MOLDED)	9'-3"

COMPLEMENT

FORCE COMMANDER	1
CAPTAIN	1
WARDROOM	9
WARRANT OFFICERS	4
CHIEF PETTY OFFICERS	14
ENLISTED MEN	98
	TOTAL = 127

SMALL BOATS

		EACH	TOTAL
1	26'-0" SAILING LAUNCH		
1	25'-6" PULLING S.B. SURFBOAT		
2	26'-0" MONOMOY SURFBOAT		
1	26'-6" MOTOR BOAT		
1	25'-10" MOTOR S.B. SURFBOAT		

TOTAL ACCOMMODATION

FIRE PLUGS

MAIN DECK	4	ENGINE ROOM	1
2ND. DECK	5	AUX. MACH. ROOM	1
BOILER ROOM	1		TOTAL: 12

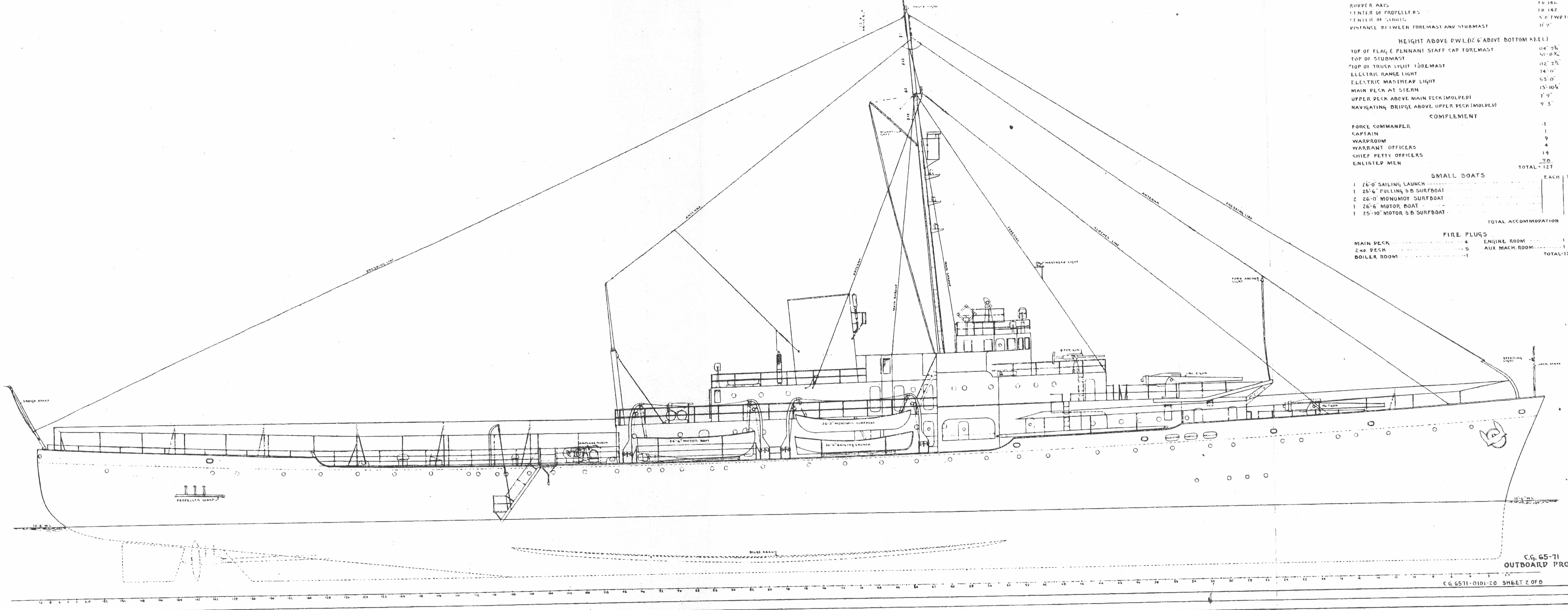
TRUCK LIGHT
ANCHOR LIGHT
ENSIGN STAFF
PROPELLER GUARD
12'-8" W.L.
BILGE KEEL
26'-6" MOTOR BOAT
26'-0" MONOMOY SURFBOAT
26'-0" SAILING LAUNCH
ANTENNA
MASTHEAD LIGHT
FORD ANCHOR LIGHT
STEERING LIGHT
JACK STAFF
No 1 GUN
No 2 GUN
6 PDR GUN
12'-6" W.L.

C.G. 65-71
OUTBOARD PROFILE

C.G. 6571-0101-20 SHEET 2 OF 8

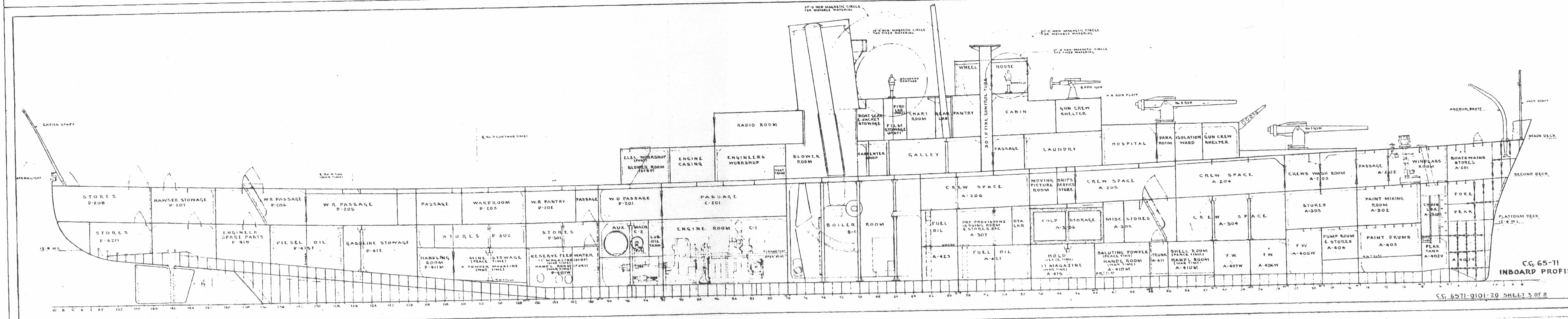
ENSIGN STAFF
STERN LIGHT
℄ No 3 GUN (WAR TIME)
℄ No 4 GUN (WAR TIME)
12'-8" W.L.
STORES D-208
HAWSER STOWAGE D-207
W.R. PASSAGE D-206
W.R. PASSAGE D-205
PASSAGE
WARDROOM D-203
W.R. PANTRY D-202
PASSAGE
W.O. PASSAGE D-201
PASSAGE C-201
STORES D-420
ENGINEER SPARE PARTS D-418
DIESEL OIL D-415F
GASOLINE STOWAGE D-412
STORES D-302
HANDLING ROOM D-411M
MINE STOWAGE (PEACE TIME) & POWDER MAGAZINE (WAR TIME)
STORES D-301
RESERVE FEED WATER (STBD) (PORT)
11 MAGAZINE (WAR TIME) HAND'L ROOM (WAR TIME) D-401W
AUX. MACH. C-2
LUB. OIL TANK
ENGINE ROOM C-1
ELEC. WORKSHOP (PORT)
BLOWER ROOM (STBD)
ENGINE CASING
ENGINEERS WORKSHOP
VENT TRUNK
RADIO ROOM
BLOWER ROOM
BOILER ROOM B-1
30'-0" NON-MAGNETIC CIRCLE FOR MOVABLE MATERIAL
18'-0" NON-MAGNETIC CIRCLE FOR FIXED MATERIAL
20'-0" NON-MAGNETIC CIRCLE FOR MOVABLE MATERIAL
10'-0" NON-MAGNETIC CIRCLE FOR FIXED MATERIAL
STANDARD COMPASS
BINNACLE
WHEEL HOUSE
6 PDR GUN
A.A. GUN PLATF.
No 2 GUN
No 1 GUN
BOAT GEAR & JACKET STOWAGE
PYRO LKR
FILM STOWAGE (STBD)
CHART ROOM
GEAR LKR
PANTRY
30'-0" FIRE CONTROL TUBE
CABIN
GUN CREW SHELTER
CARPENTER SHOP
GALLEY
PASSAGE
LAUNDRY
HOSPITAL
PARK ROOM
ISOLATION WARD
GUN CREW SHELTER
CREW SPACE A-206
MOVING PICTURE ROOM
SHIPS SERVICE STORE
CREW SPACE A-205
CREW SPACE A-204
CREWS WASH ROOM A-203
PASSAGE A-202
WINDLASS ROOM
BOATSWAINS STORES A-201
ANCHOR DAVIT
JACK STAFF
MAIN DECK
SECOND DECK
FUEL OIL
DRY PROVISIONS ISSUING ROOM & STORES ETC. A-307
STA LKR
COLD STORAGE A-306
MISC. STORES A-305
CREW SPACE A-304
STORES A-303
PAINT MIXING ROOM A-302
CHAIN LKR. A-301
FORE PEAK
PLATFORM DECK
12'-8" W.L.
A-423
FUEL OIL A-421
HOLD (PEACE TIME) 11 MAGAZINE (WAR TIME) A-415
SALUTING POWDER (PEACE TIME) HAND'L ROOM (WAR TIME) A-410M
TRUNK A-411
SHELL ROOM (PEACE TIME) HAND'L ROOM (WAR TIME) A-410M
F.W. A-407W
F.W. A-406W
F.W. A-405W
PUMP ROOM & STORES A-404
PAINT DRUMS A-403
PEAK TANK A-402V
A-401-V

C.G. 65-71
INBOARD PROFILE

C.G. 6571-0101-20 SHEET 3 OF 8